Shaft Collar For Bearing Mounting

Clamp Type

■**Features**: Less shaft damage from tightening than the Set Screw Type (**P.275**).

■**Clamp Type**

Type: Short Shoulder	Type: Long Shoulder	M Material	S Surface Treatment	A Accessory (Hex Socket Head Cap Screw 1 pc.)
SCSBN	SCSLS	S45C Equivalent	Black Oxide Coating	M SCM435 Equivalent
PSCSBN	PSCSLS		Electroless Nickel Plating	
SSCSBN	SSCSLS	SUS304 Equivalent	-	M SUS304 Equivalent
SCSNAW	SCSLAW	2000series Aluminum Alloy	Clear Anodize	
SCSNAB	SCSLAB		Black Anodize	

There may be deburring marks left around the slit.

*D3 ~D25 : C0.5
D30~D50 : C1

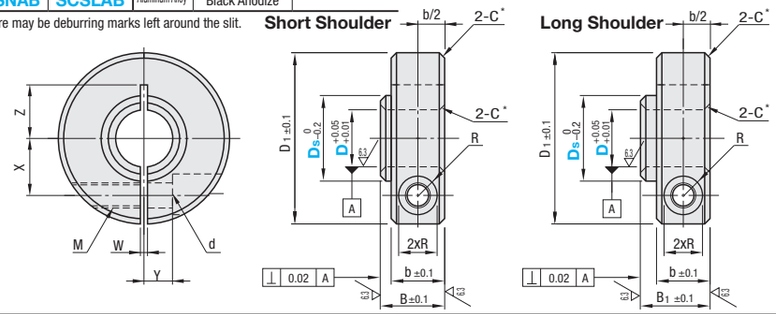

RoHS10

Part Number Type	D	Ds Selection	Applicable Bearing (O.D.)	B	B1	D1	M (Coarse)	b	d	R	W	X	Y	Z	Unit Price SCSBN SCSLS	PSCSBN PSCSLS	SSCSBN SSCSLS	SCSNAW SCSLAW	SCSNAB SCSLAB
(Short Shoulder) SCSBN PSCSBN SSCSBN SCSNAW SCSNAB (Long Shoulder) SCSLS PSCSLS SSCSLS SCSLAW SCSLAB	3	5	673ZZ (6), 683ZZ (8)	9	12	16	M3	8	3.4	3	1	4.5	2.2	3~5		-		-	-
		6	693ZZ (8), 603ZZ (9), 623ZZ (10)													-	-	-	-
		8	633ZZ (13)													-	-	-	-
	4	6	674ZZ (7), 684ZZ (9)			18						5	3	3.5~6	-		-	-	-
		7	694ZZ (11), 604ZZ (12), 624ZZ (13)												-		-	-	-
	5	7	675ZZ (7)			20						5.5	4	5~6.5				-	-
		8	685Z (11), 695ZZ (13), 605ZZ (14), 625ZZ (16)															-	-
	6	8	676ZZ (10), 686ZZ (13)									6		6~6.5				-	-
		* 9	696ZZ (15), 606ZZ (17), 626ZZ (19)																
		12	636ZZ (22)														-	-	-
	8	11	678ZZ (12), 688ZZ (16)	11.5	14	25	M4	10	4.5	3.75	1.5	7	5	7~9				-	-
		*12	698ZZ (19), 608ZZ (22), 628ZZ (24)																
		14	638ZZ (28)													-	-	-	-
	10	12	6700ZZ (15)			30						9		10				-	-
		*13	6800ZZ (19)																-
		*14	6900ZZ (22), 6000ZZ (26)																
		16	6200ZZ (30), 6300ZZ (35)															-	-
	12	14	6701ZZ (18)									10		10				-	-
		15	6801ZZ (21)															-	-
		*16	6901ZZ (24), 6001ZZ (28)																
		*18	6201ZZ (32), 6301ZZ (37)																-
	15	17	6702ZZ (21)			34						11.5	6	12				-	-
		*18	6802ZZ (24), 6902ZZ (28)																
		*19	6002ZZ (32)																
		*21	6202ZZ (35), 6302ZZ (42)																-
	17	20	6803ZZ (26)															-	-
		*21	6903ZZ (30), 6003ZZ (35)																
		*23	6203ZZ (40), 6303ZZ (47)																
	20	23	6704ZZ (27), 6804ZZ (32)	14	17	40	M5	12	5.5	4.5		14	7	14				-	-
		*24	6904ZZ (37)																-
		*27	6004ZZ (42), 6204ZZ (47)																-
		28	6304ZZ (52)															-	-
	25	28	6805ZZ (37)			45						17	10	17				-	-
		*29	6905ZZ (42)																-
		*31	6005ZZ (47)																
		*32	6205ZZ (52)																-
		33	6305ZZ (62)															-	-
	30	33	6806ZZ (42)	17.5	21	55	M6	15	6.6	6	2	20		18				-	-
		35	6906ZZ (47)															-	-
		*38	6006ZZ (55), 6206ZZ (62), 6306ZZ (72)																
	35	38	6807ZZ (47)			60						23	12	21	-			-	-
		41	6907ZZ (55)															-	-
		*43	6007ZZ (62), 6207ZZ (72)																
		45	6307ZZ (80)															-	-
	40	43	6808ZZ (52)			70	M8		9	7		26	13	23		-		-	-
		45	6908ZZ (62)															-	-
		*48	6008ZZ (68), 6208ZZ (80)																-
		50	6308ZZ (90)															-	-
	50	55	6910ZZ (72)	22.5	26	85	M10	20	11	9	3	32	16	28				-	-
		57	6010ZZ (80)															-	-

Prices in ( ) are for Long Shoulder Type only.

Ordering Example: Part Number - Ds
SCSBN10 - 14

Example

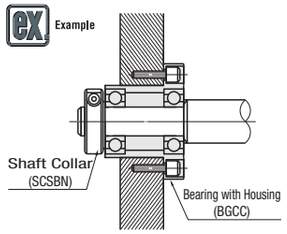

Shaft Collar For Bearing Mounting (Space-Saving Design)

Compact, Clamp

■**Features**: Smaller by up to 32% in width (B dim.) and 14% in O.D. (D1 dim.) than Clamp Type (**P.277**).

■**Compact, Clamp**

Type: Short Shoulder	Type: Long Shoulder	M Material	S Surface Treatment	A Accessory (Hex Socket Head Cap Screw 1 pc.)
SCBNJ	SCLSJ	S45C Equivalent	Black Oxide Coating	M SCM435 Equivalent
PSCBNJ	PSCLSJ		Electroless Nickel Plating	M SUS304 Equivalent
SSCBNJ	SSCLSJ	SUS304	-	

There may be deburring marks left around the slit.

*D8 ~D25 : C0.5
D30~D40 : C1

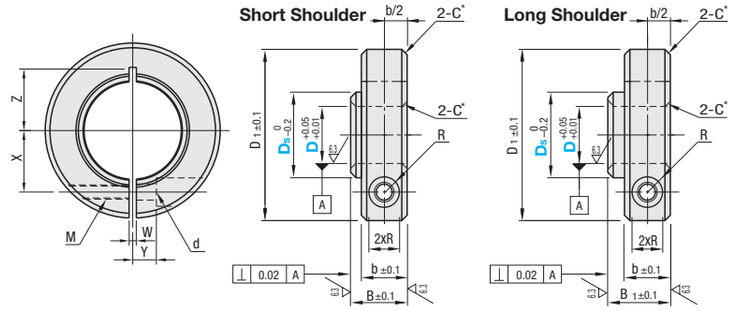

Part Number Type	D	Ds Selection	Applicable Bearing (O.D.)	B	B1	D1	M (Coarse)	b	d	R	W	X	Y	Z	Unit Price SCBNJ SCLSJ	PSCBNJ PSCLSJ	SSCBNJ SSCLSJ
(Short Shoulder) SCBNJ PSCBNJ SSCBNJ (Long Shoulder) SCLSJ PSCLSJ SSCLSJ	8	*11	678ZZ (12), 688ZZ (16)	9		22						7	4	7			
		12	698ZZ (19), 608ZZ (22), 628ZZ (24)														
	10	13	6800ZZ (19)	9.5	12	25	M3	8	3.5	3	1.5	8		9			
		14	6900ZZ (22), 6000ZZ (26)														
		16	6200ZZ (30), 6300ZZ (35)														
	12	15	6801ZZ (21)									9	3				
		16	6901ZZ (24), 6001ZZ (28)														
		18	6201ZZ (32), 6301ZZ (37)														
	15	18	6802ZZ (24), 6902ZZ (28)			30						11		11			
		19	6002ZZ (32)														
		21	6202ZZ (35), 6302ZZ (42)														
	17	21	6903ZZ (30), 6003ZZ (35)									11.5	4	12			
		23	6203ZZ (40), 6303ZZ (47)														
	20	23	6704ZZ (27), 6804ZZ (32)		13	36						13	5	13			
		24	6904ZZ (37)														
		27	6004ZZ (42), 6204ZZ (47)														
	25	28	6805ZZ (37)	11.5	15	42	M4	10	4.5	3.75		16.5		16.5			
		29	6905ZZ (42)														
		31	6005ZZ (47)														
		32	6205ZZ (52)														
	30	*35	6906ZZ (47)	14	18	50	M5	12	5.5	4.5		20	6	20			
		38	6006ZZ (55), 6206ZZ (62), 6306ZZ (72)														
	35	41	6907ZZ (55)			55					2	22.5		21			
		43	6007ZZ (62), 6207ZZ (72)														
	40	45	6908ZZ (62)			60						25		23			
		48	6008ZZ (68), 6208ZZ (80)														

Prices in ( ) are for Short Shoulder Type only.

Ordering Example: Part Number - Ds
SCBNJ10 - 14