Toggle Clamps

Side Push-Pull Free Mounting Direction / Horizontal (Flange Base)

1N=0.101972kgf

Side Push-Pull Free Mounting Direction

(Clamped)

* Shaft: Nickel Plating

Part Number	MC02-1	MC02-S1
Body Material	SS400	SUS304 Shaft Material: SUS416 Pin: SUS410
Surface Treatment	* Trivalent Chromate	-
Stroke (mm)	20.34	
Tightening Force (N)	900	
Handle Open-Close Angle	180°	
Weight (g)	120	
Accessory	Steel Bolt	Stainless Steel Bolt
Unit Price		

Side Push-Pull Free Mounting Direction

(Clamped)

* Shaft: Nickel Plating

Part Number	MC02-2	MC02-S2
Body Material	SS400	SUS304 Shaft Material: SUS416 Pin: SUS410
Surface Treatment	* Trivalent Chromate	-
Stroke (mm)	40	
Tightening Force (N)	1470	
Handle Open-Close Angle	180°	
Weight (g)	280	
Accessory	Steel Bolt	Stainless Steel Bolt
Unit Price		

Side Push-Pull Free Mounting Direction

(Clamped)

* Shaft: Nickel Plating

Part Number	MC02-3
Body Material	SS400
Surface Treatment	* Trivalent Chromate
Stroke (mm)	66.7
Tightening Force (N)	3138
Handle Open-Close Angle	180°
Weight (g)	750
Accessory	Steel Bolt
Unit Price	

MC02-1
MC02-S1 (Stainless Steel)

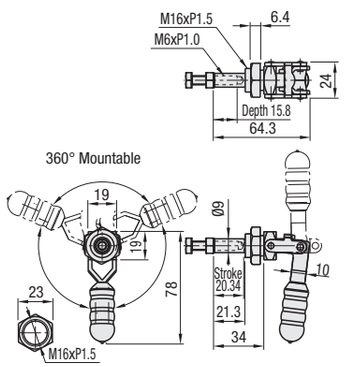

MC02-2
MC02-S2 (Stainless Steel)

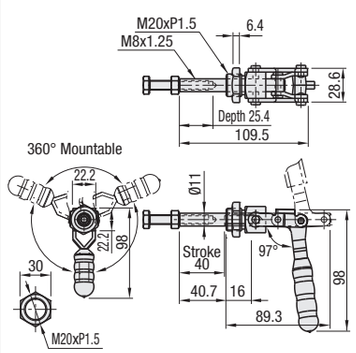

MC02-3

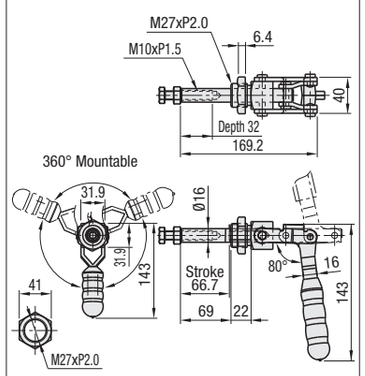

Horizontal (Flange Base)

(Clamped)

* Shaft: Nickel Plating

Part Number	MC03-1	MC03-S1
Body Material	SS400	SUS304
Surface Treatment	* Trivalent Chromate	-
Stroke (mm)	17	
Tightening Force (N)	450	
Handle Open-Close Angle	190°	
Weight (g)	50	
Accessory	Bolt with Rubber Material: NBR Hardness: Shore A70	* Stainless Steel Bolt
Unit Price		

Horizontal (Flange Base)

(Clamped)

* Shaft: Nickel Plating

Part Number	MC03-2	MC03-3
Body Material	SS400	
Surface Treatment	* Trivalent Chromate	
Stroke (mm)	16	
Tightening Force (N)	500	
Handle Open-Close Angle	180°	
Weight (g)	65	
Accessory	Bolt with Rubber Material: NBR Hardness: Shore A70	
Unit Price		

MC03-1
MC03-S1 (Stainless Steel)

** Please note that rubber is not attached to stainless steel bolt.

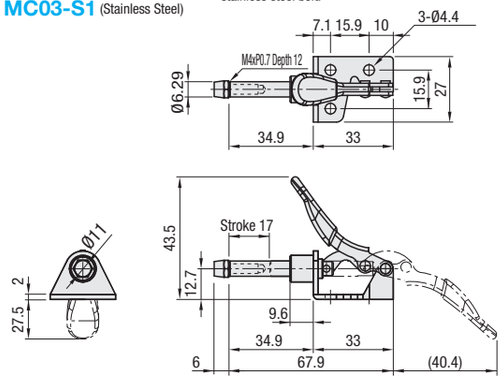

MC03-2
(Right Turn)

MC03-3
(Left Turn)

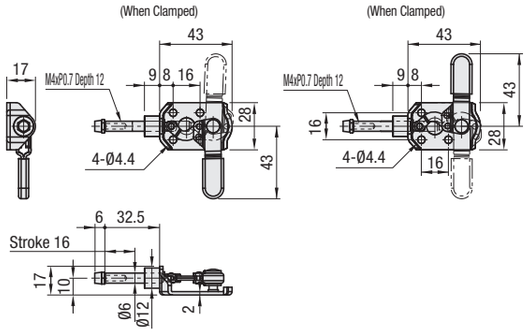

Ordering Example | Part Number | MC02-1

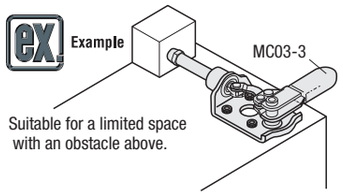

Toggle Clamps

Hold Down, Vertical Handle (Flange Base)

1N=0.101972kgf

Hold Down, Vertical Handle (Flange Base)

(Clamped)

Part Number	MC04-1	MC04-S1
Body Material	SS400	SUS304
Surface Treatment	Trivalent Chromate	-
Tightening Force (N)	441	
Weight (g)	60	
Arm Open-Close Angle	100°	
Handle Open-Close Angle	56°	
Accessory	Bolt with Rubber Material: NBR Hardness: Shore A70	* Stainless Steel Bolt
Unit Price		

Hold Down, Vertical Handle (Flange Base)

(Clamped)

Part Number	MC04-2	MC04-S2
Body Material	SS400	SUS304
Surface Treatment	Trivalent Chromate	-
Tightening Force (N)	882	
Weight (g)	170	
Arm Open-Close Angle	95°	
Handle Open-Close Angle	60°	
Accessory	Bolt with Rubber Material: NBR Hardness: Shore A70	* Stainless Steel Bolt
Unit Price		

Hold Down, Vertical Handle, Welded Tip (Flanged Base)

(Clamped)

Part Number	MC04-5
Body Material	SS400
Surface Treatment	Trivalent Chromate
Tightening Force (N)	2270
Weight (g)	340
Arm Open-Close Angle	100°
Handle Open-Close Angle	56°
Accessory	Bolt with Rubber Material: NBR Hardness: Shore A70
Unit Price	

MC04-1
MC04-S1 (Stainless Steel)

* Please note that rubber is not attached to stainless steel bolt.

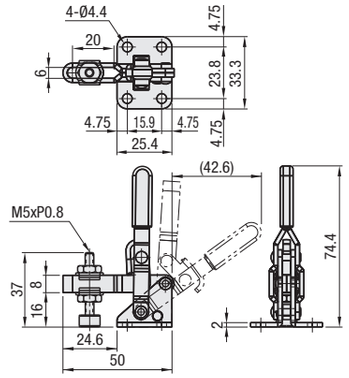

MC04-2
MC04-S2 (Stainless Steel)

* Please note that rubber is not attached to stainless steel bolt.

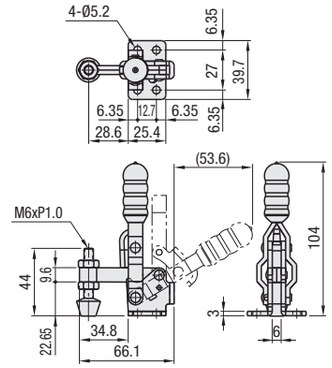

MC04-5

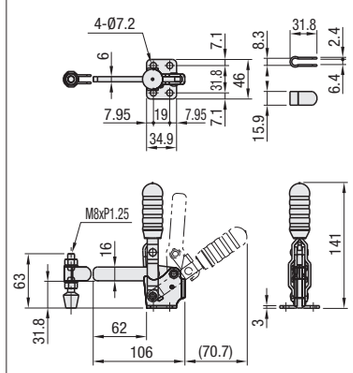

Hold Down, Vertical Handle (Flange Base)

(Clamped)

Part Number	MC04-3	MC04-S3
Body Material	SS400	SUS304
Surface Treatment	Trivalent Chromate	-
Tightening Force (N)	2205	
Weight (g)	355	
Arm Open-Close Angle	100°	
Handle Open-Close Angle	56°	
Accessory	Bolt with Rubber Material: NBR Hardness: Shore A70	* Stainless Steel Bolt
Unit Price		

Hold Down, Vertical Handle (Flange Base)

(Clamped)

Part Number	MC04-4
Body Material	SS400
Surface Treatment	Trivalent Chromate
Tightening Force (N)	3332
Weight (g)	635
Arm Open-Close Angle	112°
Handle Open-Close Angle	61°
Accessory	Bolt with Rubber Material: NBR Hardness: Shore A70
Unit Price	

MC04-3
MC04-S3 (Stainless Steel)

* Please note that rubber is not attached to stainless steel bolt.

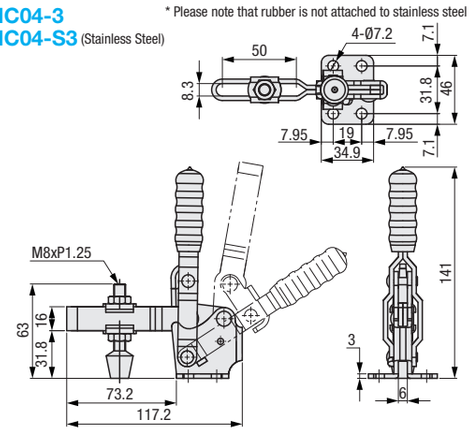

MC04-4

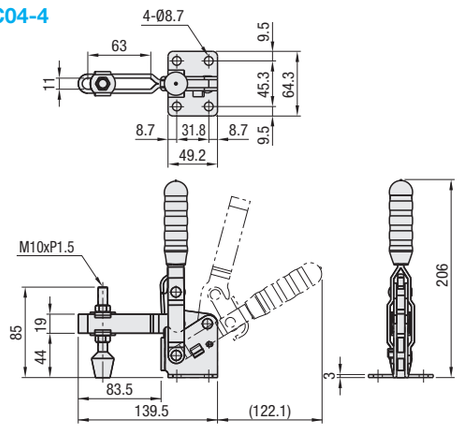

Ordering Example | Part Number | MC04-1

Combination of these app. examples can be selected on our website. Selection Procedure Details P.87

e-Catalog Search Keyword

#MA93 Search | #MA521 Search | #MA523 Search

* Enter the search keyword in the search box on e-Catalog. The search result will be shown in "Modular Assembler" area.